Effect of shear rate on the rate of polymerization of styrene

Anil Kumar*, Santosh K. Gupta and Ashok Kumar
Department of Chemical Engineering, Indian Institute of Technology, Kanpur 208016, *India*
(*Received* 26 *January* 1982; *revised* 6 *July* 1982)
(*Received* 26 *January* 1982; *revised* 6 *July* 1982)

Application of shear was found to have considerable effect on the radical polymerization of styrene initiated by benzoyl peroxide. The initial rate of polymerization decreases by as much as 30% for low shear rates ($\dot{\gamma}$), but on further increasing $\dot{\gamma}$ it increases slightly, levelling ultimately at the 10% reduction level. The effect of solvent was shown to have negligible effect, in direct contrast to that observed by Kumar *et al.*[1-3] for methyl methacrylate and acrylonitrile. Experiments confirm that the reduction in the rate of initial polymerization can be attributed largely to the change in initiator efficiency on the application of shear rate. As a further test, the decomposition rate of benzoyl peroxide in nitrobenzene at 80°C was measured and was found to increase significantly on application of shear. This confirms the importance of mass transfer resistance in removal of CO_2. The reduction in the rate of polymerization of styrene can now be explained as follows. In the reaction mass, there are benzoyloxy as well as phenyl radicals and styrene molecules have been shown by Bevington[4] to react preferentially with the former. The fall in the rate of polymerization of styrene occurs because, on the application of shear, decomposition of benzoyloxy radicals is favoured in the forward direction and its concentration in the reaction mass falls. As a result the initiation of polymer radicals reduces, which in turn gives a lower rate of polymerization.

Keywords Polymerization; shear rate; styrene; initiation; benzoyl peroxide; carbon dioxide removal; mass transfer resistence; decomposition

INTRODUCTION

Styrene undergoes a radical polymerization with benzoyl peroxide initiator. The initial stages of the reaction can be represented thus[5]

Initiation

$$I_2 \xrightarrow{k_I} 2I \tag{1}$$

$$I + M \xrightarrow{k_I} P_1 \tag{2}$$

Propagation

$$P_n + M \xrightarrow{k_p} P_{n+1} \qquad n = 1,2,\ldots \tag{3}$$

Termination

$$P_m + P_n \xrightarrow{k_{tc}} M_{n+m} \qquad m,n = 1,2,\ldots \tag{4}$$

$$P_m + P_n \xrightarrow{k_{td}} M_m + M_n \qquad m,n = 1,2,\ldots \tag{5}$$

where I_2 is an initiator molecule, I an initiator radical, M a monomer molecule, P_m a polymer radical and M_m an inactive polymer molecule consisting of m repeat units. In the above mechanism it has been assumed that all initiator radicals generated in (1) are used up completely in reaction (2). In reality it is not so, and to account for this, an initiator efficiency, f, is defined as the fraction of radicals used up in generating polymer radicals, P_i. In terms of this, the rate of polymerization, t_p, can be derived as

$$r_p = -\frac{d[M]}{dt} = k_p\left(\frac{f k_I}{k_t}\right)^{1/2}[M][I_2]^{1/2} \tag{6}$$

where the square brackets denote the concentration of the species involved and the rate constants k_I, k_p and k_t ($\equiv k_{tc} + k_{td}$) have been defined in equations (1) to (5).

In the kinetic studies of radical polymerization near zero conversion, the rates in the absence of mixing have been measured and results compiled in ref. 6. In recent studies[7,8] and in our earlier work on the polymerization of methyl methacrylate[1,9] and acrylonitrile[3], the role of mixing has already been established. In this work, the polymerization of styrene has been carried out in a special dilatometer in which the entire reaction mass can be subjected to a constant shear rate ($\dot{\gamma}$). The rate of reaction of styrene near zero conversion has been measured as a function of $\dot{\gamma}$ and r_p is found to reduce by as much as 30% below the zero-shear-rate value. The reduction in the rate of polymerization of styrene has been shown largely to be due to the change in the initiator efficiency. The importance of such studies can hardly be overemphasized because in any industrial polymerization reactors (batch reactor with mixers, tubular flow reactors or continuous-flow stirred-tank reactors) there is a spatial variation of shear rate within the reaction mass.

* To whom correspondence should be addressed

0032-3861/83/040443-06$03.00
© Butterworth and Co. (Publishers) Ltd.

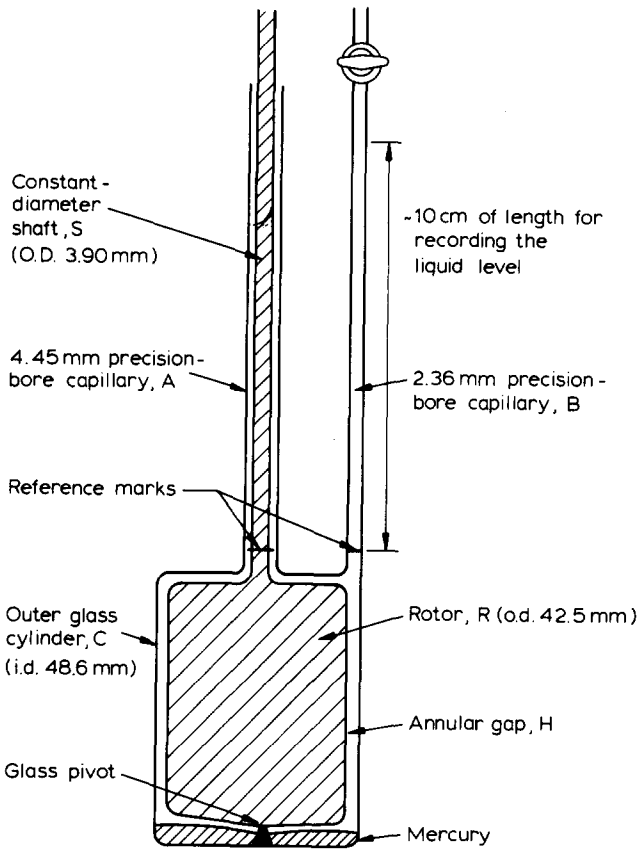

Figure 1 Schematic diagram of the dilatometer

EXPERIMENTAL

Dilatometer

A special dilatometer which combines the features of a rheometer and a conventional dilatometer is shown in *Figure 1*. There is a glass cylinder, C (i.d. 48.6 mm) having a precision bore capillary A (i.d. 4.45 mm) exactly at its centre. Through A passes a constant-diameter stainless-steel shaft (o.d. 3.90 mm) which is connected to the rotor R (o.d. 42.5 mm). The rotor rests on a glass pivot to facilitate its frictionless rotation. Another precision-bore capillary B (i.d. 2.36 mm) has been attached on the side of cylinder C for filling of the monomer.

Chemicals

Analytical grade styrene was washed with 0.1 N NaOH at least three times to remove the inhibitor completely. The inhibitor-free monomer is stored over anhydrous calcium chloride for 2 days in a refrigerator before it was used for experiments.

The initiator, benzoyl peroxide, was reprecipitated from methanol, and analytical grade benzene was used in the study of the solution polymerization of styrene.

Procedure

Mercury was added to the dilatometer so that most of the monomer remains in its cylindrical annulus. Then it was filled with the inhibitor-free styrene up to the reference mark as shown in *Figure 1* and then placed in a constant temperature bath maintained at 60°C (controlled within ± 0.1°C). The level of liquid first rises in the capillaries due to the thermal expansion of liquid and then falls due to polymerization. The rate of fall of liquid levels in both capillaries A and B are measured accurately by a cathetometer. The rotor R is rotated at a constant speed and its speed of rotation measured by an electronic stroboscope. The speed of rotation was monitored and maintained at a constant value during the experiment. From the rate of fall of the liquid in the capillaries, the rate of polymerization is determined using standard dilatometric relations[3,5]. Since the gap between the rotor and the glass cylinder is small, the entire reaction mass in the annulus can be assumed to be at the uniform shear rate, $\dot{\gamma}$. This can be calculated using the standard rheometric equation

$$\dot{\gamma} = \frac{\omega R_R}{R_G - R_R} \tag{7}$$

where R_R and R_G are the radii of the rotor and the glass cylinder respectively and ω is the angular velocity of the rotor.

REGRESSIONAL ANALYSIS OF DATA[10]

A linear regressional analysis of every set of experimental data has been carried out and the goodness of fit measured by the coefficient of determination, R^2, calculated from:

$$R^2 = \frac{\sum_{i=1}^{n}(\hat{h}_i - \bar{\hat{h}}_i)^2}{\sum_{i=1}^{n}(h_i - \bar{h})^2} \tag{8}$$

Table 1 Y/Y_0 and coefficient of determination, R^2, for various shear rates for styrene at 60°C

Shear rate, $\dot{\gamma}$ (s^{-1})	[M] (mol l^{-1})	10^{-2} [I_2] (mol l^{-1})	$Y \times 10^4$	$(Y/Y_0) \times 100$	R^2
0	8.86	0.1265	0.481	100	0.995
0	8.86	0.0413	0.509	100	0.997
0	6.33	0.1217	0.495	100	0.998
0	6.33	0.1087	0.481	100	0.991
0	5.06	0.1252	0.500	100	0.995
0	4.43	0.1286	0.509	100	0.981
43.2	8.86	0.0964	0.463	90.9	0.996
46.8	6.33	0.1087	0.446	92.9	0.997
61.2	6.33	0.1087	0.426	88.7	0.997
72.0	5.06	0.0561	0.433	86.5	0.997
79.2	8.86	0.1169	0.412	85.7	0.994
84.9	6.33	0.1080	0.426	88.7	0.997
86.4	4.43	0.1287	0.406	79.9	0.973
105.0	8.86	0.1268	0.330	68.8	0.992
108.0	5.06	0.1207	0.370	74.0	0.998
118.8	8.86	0.0929	0.352	73.4	0.993
129.6	8.86	0.1268	0.373	77.5	0.997
129.6	6.33	0.1261	0.331	69.0	0.985
136.8	5.06	0.1252	0.369	73.8	0.955
145.0	5.06	0.0413	0.360	72.1	0.996
144.0	8.86	0.1268	0.355	73.8	0.975
162.0	8.86	0.1268	0.384	80.0	0.997
169.2	6.33	0.1349	0.360	75.0	0.993
187.2	5.06	0.1432	0.385	76.9	0.993
201.6	8.86	0.1268	0.394	82.0	0.979
237.6	6.36	0.0986	0.415	86.4	0.931
240.5	8.86	0.1268	0.424	88.4	0.994
252.0	8.86	0.1268	0.430	89.5	0.984
288.0	8.86	0.1268	0.421	87.7	0.992

Density of styrene at 60°C = 0.8690 g ml^{-1}
Density of polymer in styrene at 60°C = 1.0475 g ml^{-1}

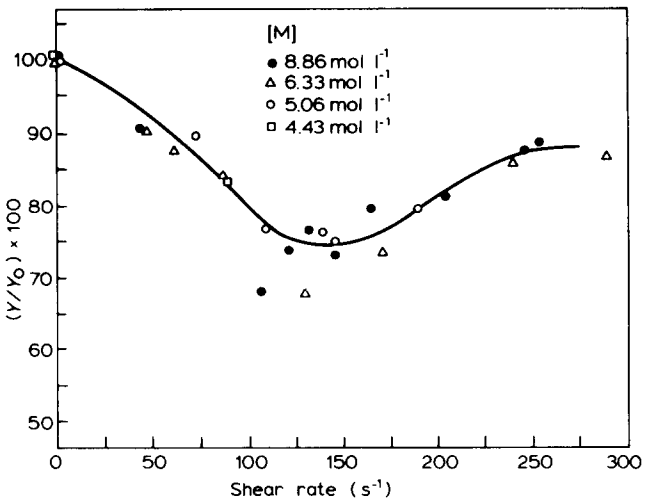

Figure 2 Y/Y_0 *versus* $\dot{\gamma}$

where h_i is the height of liquid in the dilatometer at time t_i, $\bar{h}$ is the mean value of $h_i(=\sum_1^n h_i/n)$, $\hat{h}_i$ is the calculated value of the liquid height $(=b_0+b_1t$, where b_0 and b_1 are coefficients characterizing the least-squares straight-line fit of the experimental data), $\bar{\hat{h}}$ is the mean value of $\hat{h}_i$ $(=\sum_1^n \hat{h}_i/n)$ and n is the number of measurements made. Values of R^2 more than 0.8 are considered to lead to good straight-line fits[10].

RESULTS AND DISCUSSION

To check if the dilatometer was working properly, the rate of polymerization, r_p, of styrene at zero shear was measured and compared with the values reported in the literature[11,12]. They were found to match within the experimental error. The rates were then measured at different shear rates, $\dot{\gamma}$, and monomer concentrations. For each experimental run, the coefficient of determination, R^2, and Y defined by

$$Y=\frac{r_p}{[M][I_2]^{1/2}} \tag{9}$$

were calculated. According to the kinetic scheme represented by equations (1) to (5) and the rate expression given in equation (6), Y should be equal to $k_p(fk_I/k_t)^{1/2}$. Results have been compiled in *Table 1*.

The concentration of monomer, [M], has been varied using benzene, and Y calculated as a function of $\dot{\gamma}$ for four different values of [M]. In *Figure 2*, (YY_0) *versus* $\dot{\gamma}$ has been plotted with [M] as parameter, where Y_0 is the value of Y in the absence of shear. The data points are found to cluster around the curve shown in the figure and for styrene. The dependence of (Y/Y_0) on $\dot{\gamma}$ appears to be unaffected by the variation of [M]. When the shear rate is increased, (Y/Y_0) first falls and then at higher $\dot{\gamma}$ it increases slightly, ultimately reaching an asymptotic value of 0.9.

The fact that Y is reduced by the application of shear implies that either additional reaction steps are introduced in the reaction scheme given in equations (1) to (5) or the parameters k_p, k_t, k_I or f are functionally dependent on $\dot{\gamma}$. To show that the decrease in Y is not due to additional reaction steps and is purely a physical phenomenon, the following experiment was performed. Polymerization was carried out at $\dot{\gamma}=120\,s^{-1}$ and after some time the stirring was suddenly stopped. The fall of the liquid level in capillaries A and B of the dilatometer was measured and with the knowledge of [M] and $[I_2]$, Y as a function of time was calculated. The same experiment was carried out at $\dot{\gamma}=288\,s^{-1}$ and results plotted in *Figure 3*. In both these cases, Y is found to increase to the value of Y_0. Similar results were obtained when shear was suddenly applied to the system polymerizing without shear.

Results of *Figure 3* indicate the role of mixing in the polymerization of styrene. Since the maximum conversion in any experimental run does not exceed 2% it is expected that k_{tc} and k_{td} would not be diffusion-controlled. It can be argued that molecular collision would be increased in the presence of shear, in this way giving a higher k_{tc} and k_{td}, but it has been shown sufficiently that the rate constants are affected little by hydrodynamic factors like mixing[13-15]. With this in mind, the initiator efficiency in the reaction mass was measured at different shear rates.

To determine f, hydroquinone was used as the strong inhibitor and induction times were measured at different shear rates for identical concentrations of the inhibitor and the initiator. In *Figure 4*, results are given for three

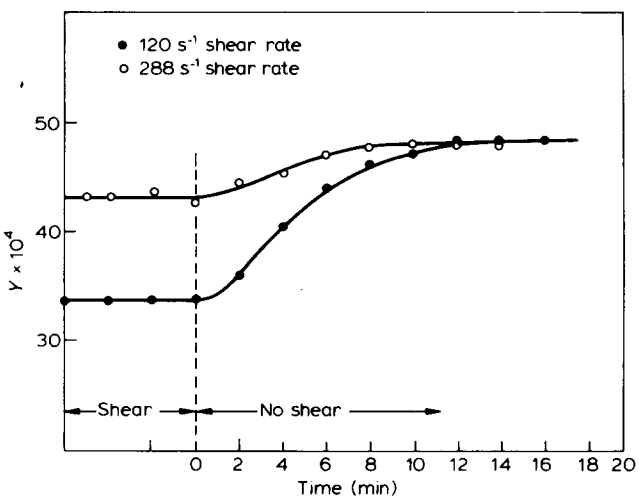

Figure 3 Effect of sudden change in the shear rate

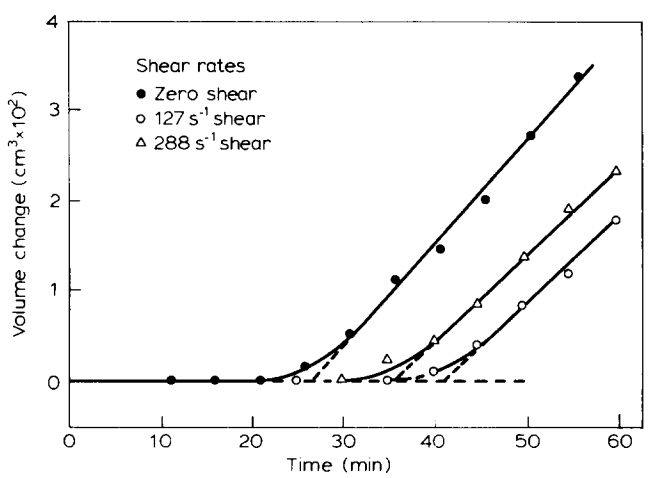

Figure 4 Measurement of induction time for identical concentrations of initiator (benzoyl peroxide) and inhibitor (hydroquinone) at various shear rates

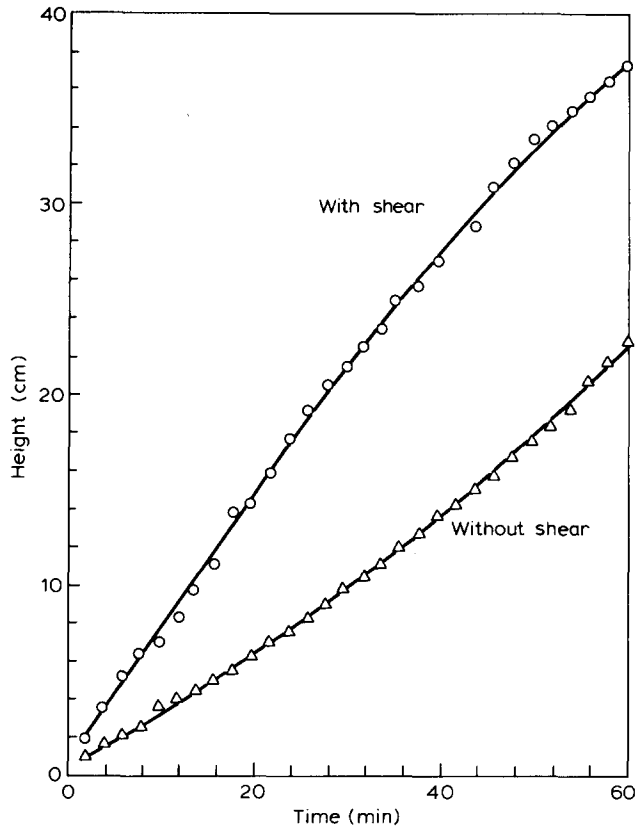

Figure 5 Fall of height *versus* time in determining the rate constant (fk_I) for the decomposition of benzoyl peroxide in nitrobenzene with and without mixing

shear rates ($\dot{\gamma}=0$, 127 and 288 s^{-1}) at which the induction times are 27, 41 and 35.5 min, respectively. Using the following relation between f and the induction time, t_d, one has

$$\frac{f_{\dot{\gamma}}}{f_0}=\frac{t_{d0}}{t_{d\dot{\gamma}}} \tag{10}$$

where $f_{\dot{\gamma}}$ and f_0 are the initiator efficiencies at $\dot{\gamma}$ and zero shear rate at which the induction times are $t_{d\dot{\gamma}}$ and t_{d0} respectively. Consequently

$$\left(\frac{f_{\dot{\gamma}=127}}{f_0}\right)^{1/2}=0.812 \tag{11}$$

and

$$\left(\frac{f_{\dot{\gamma}=288}}{f_0}\right)^{1/2}=0.872 \tag{12}$$

From *Figure 2*, it is found that

$$(Y/Y_0)_{\dot{\gamma}=127}=0.735 \tag{13}$$

and

$$(Y/Y_0)_{\dot{\gamma}=288}=0.875 \tag{14}$$

If the fall in rate is attributed totally to the change in initiator efficiency, according to equation (6), (Y/Y_0) would be equal to $(f/f_0)^{1/2}$. As seen from equations (11) to (14), this is found to be so.

Thus it is seen that, within experimental errors, the fall in the rate of radical polymerization of styrene due to the application of shear rate can be largely attributed to the change in initiator efficiency.

To confirm that this is indeed so, the effect of mixing on k_I was examined. The experimental set-up used for this purpose was identical to that given in ref. 16, except that in the reaction chamber a small magnetic stirrer was introduced. A 10% benzoyl peroxide solution in nitrobenzene was prepared and the evolution of carbon dioxide was measured in the capillaries filled with mercury. The volume of carbon dioxide released as a function of time at 80°C is shown in *Figure 5* and the effect of shear is found to enhance the liberation of carbon dioxide from the reaction mass. The decomposition of benzoyl peroxide has been suggested by Odian[17]:

$$C_6H_5COO\text{–}COOC_6H_5 \rightleftarrows [2C_6H_5COO\cdot] \tag{15}$$

$$[2C_6H_5COO\cdot] \rightarrow [C_6H_5COOC_6H_5+CO_2] \tag{16}$$

$$[2C_6H_5COO\cdot] \rightarrow 2C_6H_5COO\cdot \tag{17}$$

$$C_6H_5COO\cdot \rightarrow C_6H_5\cdot + CO_2 \tag{18}$$

$$C_6H_5\cdot + C_6H_5COO\cdot \rightarrow C_6H_5COOC_6H_5 \tag{19}$$

$$2C_6H_5\cdot \rightarrow C_6H_5C_6H_5 \tag{20}$$

It is possible to work out the detailed kinetic scheme above for the rate of decomposition of the initiator molecules. Instead of doing this, the usual practice is to write the rate of decomposition as

$$\frac{d[I_2]}{dt}=-fk_I[I_2] \tag{21}$$

where k_I is the rate constant for the forward step of (15) and f is the initiator efficiency of benzoyl peroxide in nitrobenzene. If all the molecules of I_2 that dissociate are each assumed to generate two molecules of carbon dioxide, then the total gas liberated, C, is given by

$$C=2V([I_2]_0-[I_2]) \tag{22}$$

Thus

$$\frac{1}{2V}\frac{dC}{dt}=fk_I\left([I_2]_0-\frac{C}{2V}\right) \tag{23}$$

which on integration gives

$$\ln\left(\frac{2V[I_2]_0}{2V[I_2]_0-C}\right)=fk_It \tag{24}$$

Using 10% benzoyl peroxide solution in nitrobenzene, the fall of mercury in the capillary was measured with and without shear and the results are shown in *Figure 5*. The rate constant (fk_I) was calculated using (24) and was found to be 1.76×10^{-6} and $1.03\times10^{-6}\,s^{-1}$ in the presence and absence of shear. Since it has been shown[7,8,14,15] that the rate constant k_I cannot be affected by the shear rate, this experiment further demonstrates that the initiator efficiency, f, has changed with the application of shear.

When benzoyl peroxide is used as the initiator for styrene, Odian[17] suggests additional reactions to those given in (15) to (20):

$$2C_6H_5COO\cdot + M \rightarrow C_6H_5COO\cdot + C_6H_5COOM\cdot \quad (25)$$

$$C_6H_5COO\cdot + M \rightarrow C_6H_5COOM\cdot \quad (26)$$

$$C_6H_5\cdot + M \rightarrow C_6H_5M\cdot \quad (27)$$

The mechanism suggested by Odian (equations (15) to (20) and (25) to (27)) assumes that all the reactions except that in (15) are irreversible. The initiator efficiency derived from this mechanism can be shown to involve only the rate constants of these reaction steps, [M] and $[I_2]$. Since the rate constants are not affected by shear[7,8,14,15], evidently the mechanism suggested by Odian is not sufficient to explain the change in f (or the rate of polymerization) with $\dot{\gamma}$.

Our experiments on the decomposition of benzoyl peroxide in nitrobenzene show that the rate of release of CO_2 is dependent on the shear rate, indicating the role of mass transfer[18,19]. If in the reaction mechanism (equations (15) to (20) and (25) to (27)), (18) is assumed to be reversible

$$C_6H_5COO\cdot \underset{k_6}{\overset{k_5}{\rightleftarrows}} C_6H_5\cdot + CO_2 \quad (28)$$

then the relative ratio of benzoyloxy and phenyl radicals in the reaction mass would largely be dependent upon the level of concentration of CO_2 in the reaction mass. On the application of shear, the mass transfer coefficient for carbon dioxide goes up, in this way lowering $[CO_2]$ in the solution. Since the total concentration of radicals (i.e. $[C_6H_5COO\cdot] + [C_6H_5\cdot]$) in the reaction mass is governed by reactions (15), (16), (19) and (20), which are not affected by $\dot{\gamma}$, it appears that the effect of shear rate is only to change the relative ratio of benzoyloxy to phenyl radicals.

Bevington[4] has studied the polymerization of styrene in the absence of shear and from the final product analysis has found that in the initiation step

$$C_6H_5COO\cdot + M \overset{k_7}{\rightarrow} P \quad (29)$$

$$C_6H_5\cdot + M \overset{k_8}{\rightarrow} P \quad (30)$$

$k_7/k_8 \simeq 3$. It may be noted that these reactions are identical to those given in equations (26) and (27). In the absence of shear, the reaction mass is saturated with CO_2. This saturation concentration is expected to change little with the variation of monomer concentration in the reaction mass. According to (28), this means that the ratio of benzoyloxy to phenyl radicals as well as the total concentration of radicals in the reaction mass *in the absence of shear* remains unaltered by the variation of monomer concentration. Bevington has studied the initiation of styrene by benzoyl peroxide and finds that the total rate of initiation at zero shear is unaffected by the variation of monomer concentration, and our model is consistent with this observation.

On the application of shear, the concentration of CO_2 falls depending upon the value of mass transfer coefficient, h_m, at the shear applied. This would mean that (28) is driven more towards the forward direction, thus giving a higher proportion of phenyl radicals in the reaction mass. Since h_m increases with shear and styrene is initiated by phenyl radical at lower rate, (Y/Y_0) in *Figure 2* was therefore found to reduce with $\dot{\gamma}$.

The observation made in *Figure 3* can also easily be explained by the kinetic model proposed in this work, as follows. When shearing is suddenly stopped, the mass transfer coefficient is reduced considerably and CO_2 liberated by the decomposition of benzoyl peroxide first gets into the solution and its concentration in the reaction mass slowly builds up to the saturation value. Along with this change in $[CO_2]$, the ratio of benzoyloxy and phenyl radicals adjusts itself to the level corresponding to the value at no shear. Consequently the rate of polymerization increases as shown in *Figure 3*.

Lastly, in *Figure 4*, the induction time measured by the method of strong inhibitor (hydroquinone) was found to depend upon the shear rate applied. This can also be explained by our model, as follows. In ref. 5, induction time, t_d, was derived as

$$t_d = \frac{[X]_0}{2k_I f [I_2]} \quad (31)$$

where $[X]_0$, $[I_2]$ are the concentrations of the inhibitor and the initiator and f is the initiator efficiency *in the absence of inhibitor*. Since our model predicts this to depend upon shear, in *Figure 4* t_d was therefore found to depend upon $\dot{\gamma}$.

CONCLUSIONS

The initial rate of polymerization of styrene (in bulk as well as in solution with benzene) has been determined as a function of shear rate in a special dilatometer in which a constant $\dot{\gamma}$ can be applied to the entire reaction mass. The parameter $Y = k_p(f k_I/k_t)^{1/2}$ is first found to decrease and then to increase slightly, ultimately reaching an asymptotic value as the shear rate $\dot{\gamma}$ is increased to high values. The plot of Y *versus* $\dot{\gamma}$ is found to be unaffected by the monomer concentration.

The measurement of induction time using the strong inhibitor hydroquinone clearly indicates that the reduction in Y with shear rate can largely be attributed to the change in the initiator efficiency, and this effect is totally physical.

The decomposition of benzoyl peroxide in nitrobenzene at 80°C was studied and $f k_I$ was found to increase with the application of shear. This confirms the importance of mass transfer of CO_2, and the application of shear facilitates its removal. The reduction in the rate of polymerization can be explained as follows. The decomposition of benzoyl peroxide leads to the formation of benzoyloxy as well as phenyl radicals, and styrene is known to react with benzoyloxy radicals preferentially. On the application of shear, CO_2 is removed more easily due to mixing and the decomposition of benzoyloxy radicals to phenyl radicals is favoured in the forward direction, in this way lowering the $[C_6H_5COO\cdot]$. Owing to the reduced concentration of $C_6H_5COO\cdot$ in the reaction mass, the rate of initiation reduces, consequently giving lower rate of polymerization of styrene.

ACKNOWLEDGEMENT

The authors thank Dr R. A. Mashelkar, Deputy Director, National Chemical Laboratory, Poona, India, for helpful discussions.

REFERENCES

1 Kumar, A., Gupta, S. K. and Mohan, R. *Eur. Polym. J. 1980*, **16**, 7
2 Kumar, A., Gupta, S. K. and Kumar, A. *Polym. Eng.* Sci. 1982, **22**, 1184
3 Kumar, A. M.Tech. Thesis, Indian Institute of Technology, Kanpur, India, 1980
4 Bevington, J. C. 'Radical Polymerization', Academic Press, London, 1961
5 Kumar, A. and Gupta, S. K. 'Fundamentals of Polymer Science and Engineering', Tata McGraw-Hill, New Delhi, 1978
6 Brandrup, J. and Immergut, E. H. 'Polymer Handbook', 2nd Edn., Wiley, New York, 1975
7 Kulkarni, M. G., Masheklar, R. A. and Doraiswami, L. K. *Chem. Eng. Sci.* 1980, **35**, 823
8 Kulkarni, M. G., Mashelkar, R. A. and Doraiswami, L. K. *J. Polym. Sci., Polym. Lett. Edn.* 1979, **17**, 713
9 Mohan, R. M.Tech. Thesis, Department of Chemical Engineering, Indian Institute of Technology, Kanpur, India, 1977
10 Goldberg, A. S. 'Topics in Regressional Analysis', 1st Edn., Macmillan, New York, 1968
11 Flory, P. J. 'Principles of Polymer Chemistry', 1st Edn., Cornell University Press, Ithaca, NY, 1963
12 Mayo, F. R., Gregg, R. A. and Matheson, M. S. *J. Am. Chem. Soc.* 1951, **73**, 1691
13 Metzner, A. B. in 'Advances in Heat Transfer', Vol. 2, Academic Press, New York, 1965
14 Astarita, G. and Mashelkar, R. A. *The Chem. Engr. (London)* 1977, 100
15 Clough, S. B., Read, H. E., Metzner, A. B. and Behn, V. C. *A.I.Ch.E. J.* 1962, **8**, 346
16 Petersen, R. C., Markgraf, J. H. and Ross, S. D. *J. Am. Chem. Soc.* 1981, **83**, 3819
17 Odian, G. 'Principles of Polymerization', 2nd Edn., McGraw-Hill, New York, 1982
18 Shah, Y. T. and Sharma, M. M. *Trans. Instn. Chem. Engrs.* 1976, **54**, 1
19 Danckwerts, P. V. 'Gas–Liquids Reactions', McGraw-Hill, New York, 1970